UVC85

Introduction

The Yealink UVC85 video conferencing camera combines a 4K sensor and rich interface design to provide the best video experience for your meetings, enhancing collaboration with various products. With 12x optical lossless zoom and 3x digital zoom, it captures every detail in the conference room, covering every corner easily, and is designed for medium to large conference rooms. Featuring a 90° wide-angle lens, it can be easily adjusted using the Yealink camera control plugin software or remote control. The Yealink UVC85 camera is dedicated to providing excellent video quality, ensuring everyone in the meeting room is clearly visible, offering an immersive video communication collaboration experience.



Key features and benefits

- Supports 4K video
- 12x optical zoom, 3x digital zoom
- Mechanical PTZ
- Auto-Framing
- Smooth PTZ control via remote control or Yealink camera control plugin software
- Audio integration, perfect pairing with Yealink audio devices
- Unified device management

Ultra HD 4K Camera

UVC85 supports 4K ultra-high-definition video. With excellent clarity and smoothness, and accurate color reproduction, it can precisely capture the best images of meeting participants, providing a clear and high-quality video experience.

36x HD Zoom, 90° Wide-Angle Lens

With 12x optical zoom, 3x digital zoom, and a 90° wide-angle lens, it easily covers medium to large conference rooms, ensuring everyone is in the frame and capturing details clearly, allowing remote participants to see

everyone in the meeting room.

Audio and Video Integration

UVC85 can be used with audio devices such as the CP50/CPE40, offering extensive product expansion capabilities and providing an excellent audio experience.

Auto-Framing, Efficient Meetings

Auto-framing feature detects participants in real-time and adjusts to present the best frame according to their positions, eliminating adjusting the camera manually and allowing participants to focus on the meeting.

Flexible Installation, Easy Deployment

Complete installation kits allow you to place the UVC85 on a conference table, or mount it on top of a TV, on a wall, ceiling, TV stand, or tripod. The BYOD combination requires no complex wiring deployment; the PC only needs one USB cable to connect and activate audio and video capabilities.

Device Management

Supports unified management and reporting of the main device and its connected accessories, and unified upgrades, simplifying IT operation and maintenance costs and improving management advantages.

Specifications

Specifications	Description
Package includes	· UVC85 · VCR20 Remote Control and 2 AAA Batteries · DC Power Adapter (48V/0.7A) · Wall Mount Bracket and Accessories · 2.5m USB Cable (USB-A to USB-B) · 7.5m Gigabit Ethernet Cable
Camera	· 8MP Camera · 90° DFOV, 80° HFOV, 50° VFOV · 9 preset positions · Mechanical PTZ · Pan: ±100° · Tilt: +30°, -90° · 36x HD zoom, 12x optical zoom, 3x digital zoom · Maximum video output resolution: 4K · Autofocus · Effective focal length: f=3.4mm-40.4mm · Aperture: F/1.8-F/3.6 · Exposure: Auto/Manual · White Balance: Auto Tracking/Manual/One-Push · Shutter Speed: 1/60~1/10000 sec
Device Management	· Yealink RoomConnect management tool · Yealink Management Cloud Service/Yealink Device Management Platform
AI Features	· Auto-Framing

Physical Interfaces	· 1x USB3.0 USB-B port (PC interface) · 1x USB2.0 USB-A port · 1x Internet port · 1x VCH port · 1x HDMI out port · 1x 3.5mm line in port · 1x 3.5mm line out port · 1x DC 48V power port · 1x security lock slot · 1x reset hole
Power Supply	· Average power consumption: 15.45W · Power adapter: AC 100~240V input, DC 48V/0.7A · Power input: - DC power adapter: DC 48V/0.7A - PoE power: Supports standard PoE power supply (802.3at) · Power output: USB power supply: Not supported
Product Features	· Sleep mode dimensions (W.D.H): 200mm x125mm x 172.6mm · Working mode dimensions (W.D.H): 200mm x125mm x 151mm · Working height: 151.6mm-173.8mm
Other Physical Features	· Operating humidity: 10~95% · Operating temperature: 0~40°C · Storage temperature: -30°C~70°C
Package Features	· G.W/CTN: 15.6 kg · N.W/CTN: 14.5 kg · weight: 1.29 kg · Quantity: 4

Device Compatibility

- Teams Room Accessories Compatibility Lists
- Zoom Rooms Accessories Compatibility Lists

Installation

Put on a Flat Surface

You can put the UVC85 on the conference table, and make sure that the angle of inclination of the UVC85 is no more than 5 degrees to ensure proper operation.

Mount on top of a display

Choose the following installation method when the thickness of the TV is between 0 mm and 70 mm.

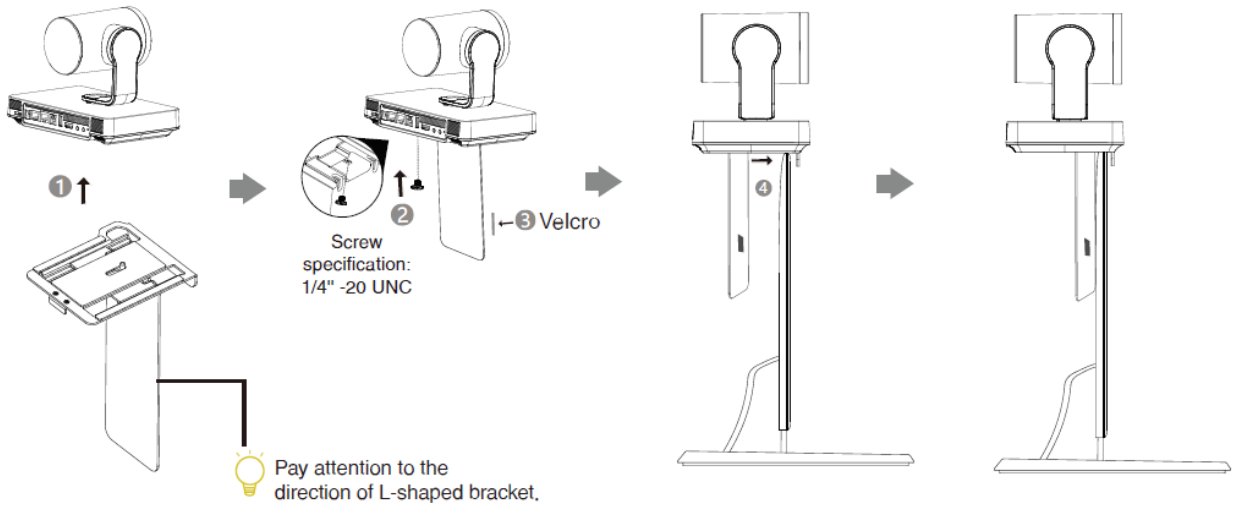

Choose the following installation method when the thickness of the TV is between 46 mm and 146 mm.

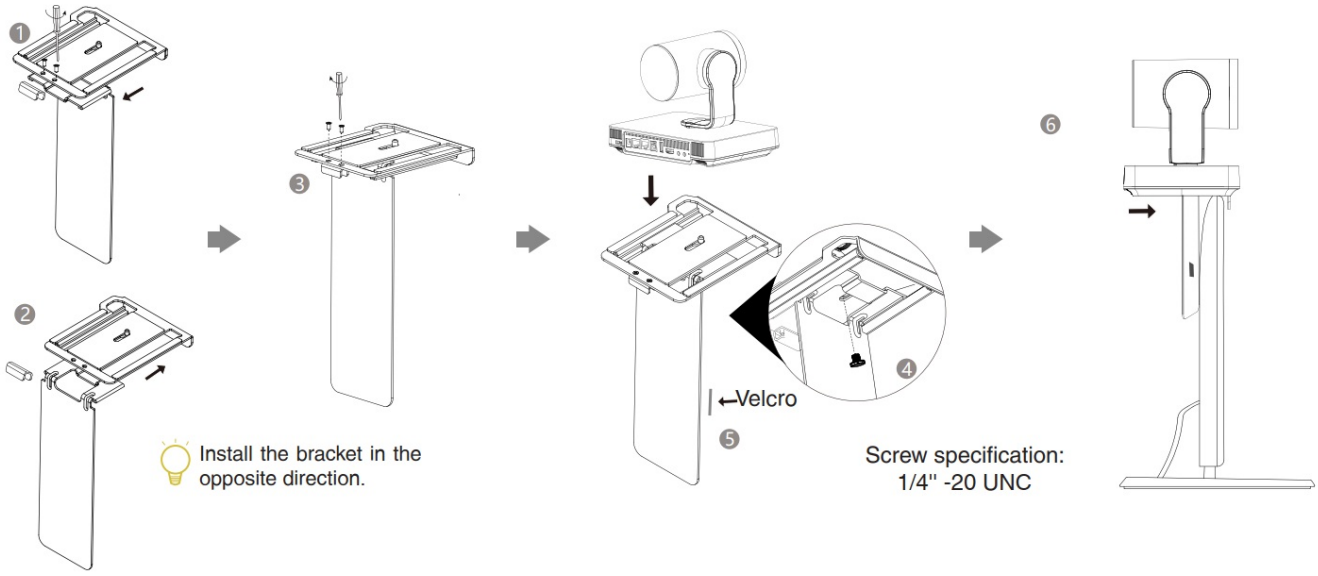

Mount on the Wall

The recommended height is 1.55 m-1.85 m above the ground.

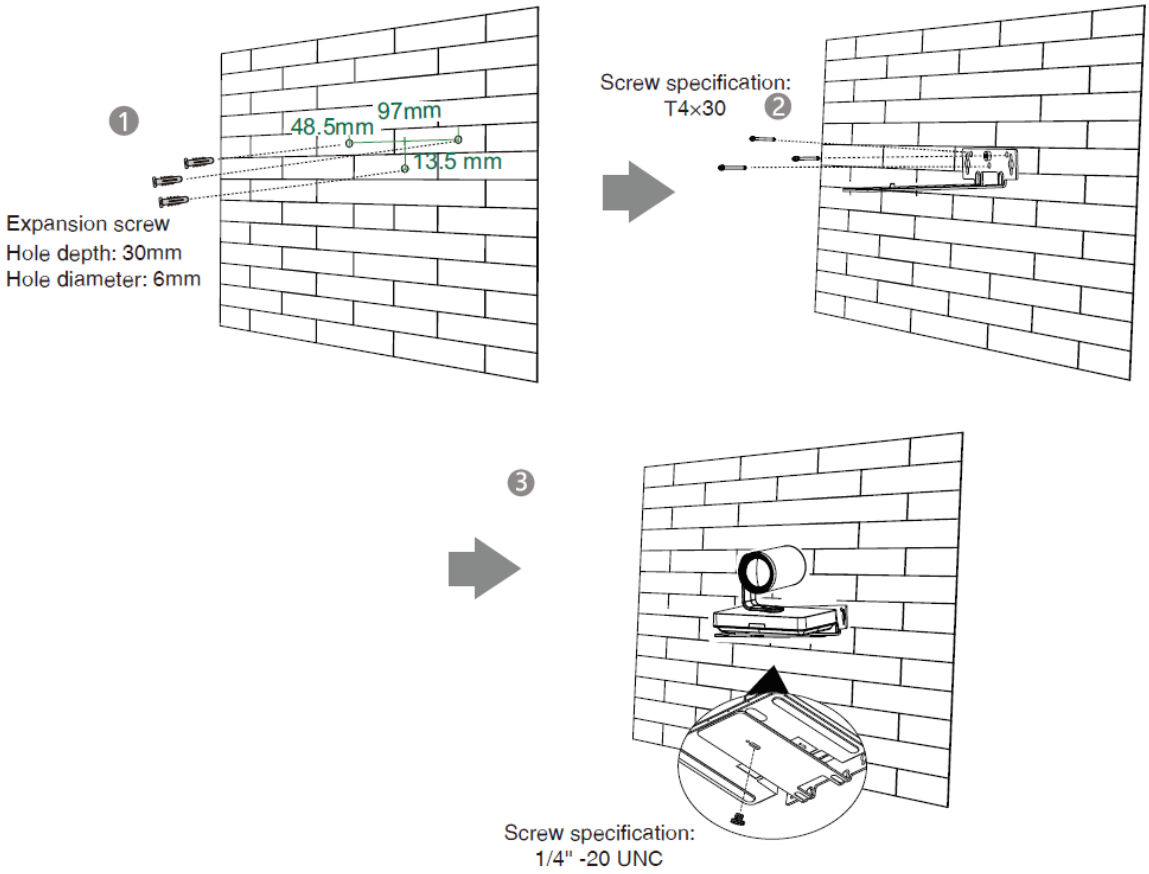

Mount on the Ceiling

ⓘ NOTE

Please tighten the screws with a screwdriver to prevent the camera from falling off.

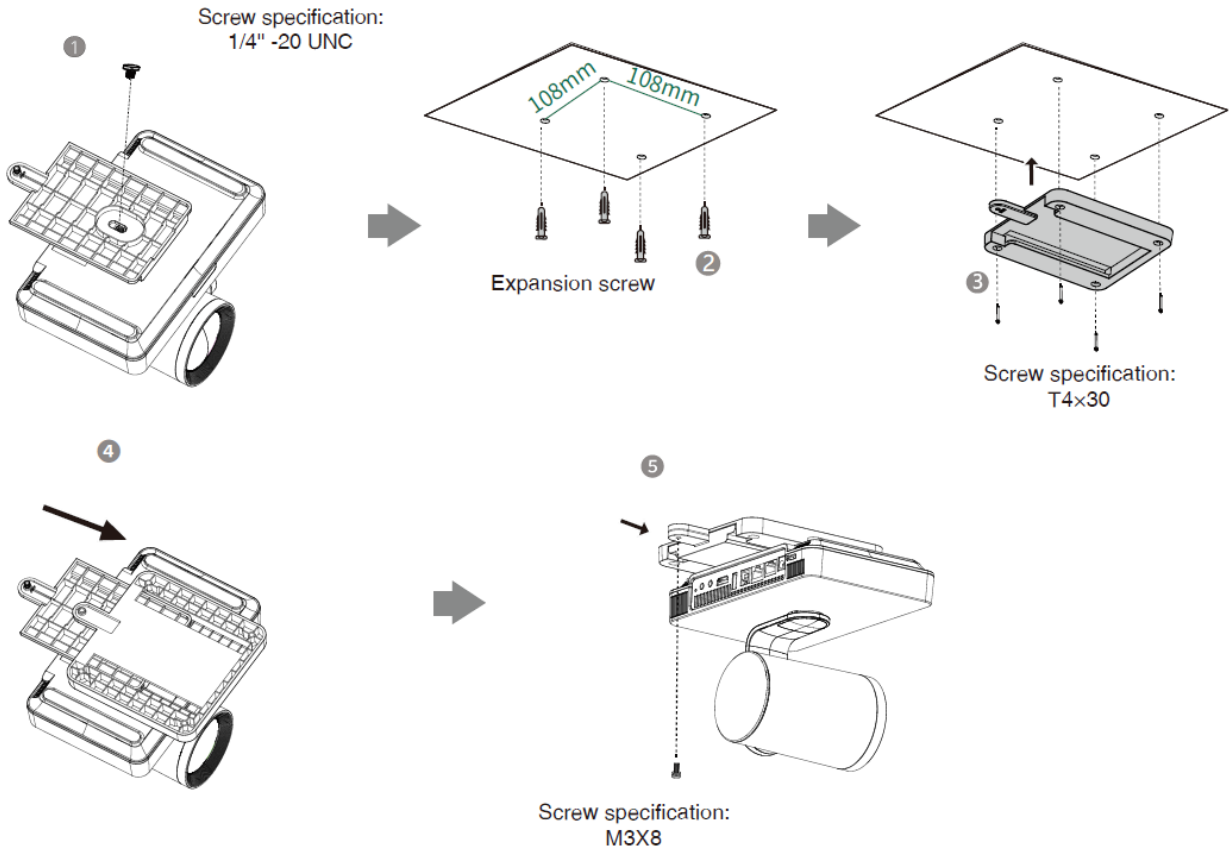

Mount onto a TV Mount

You need to purchase a TV Mount separately.

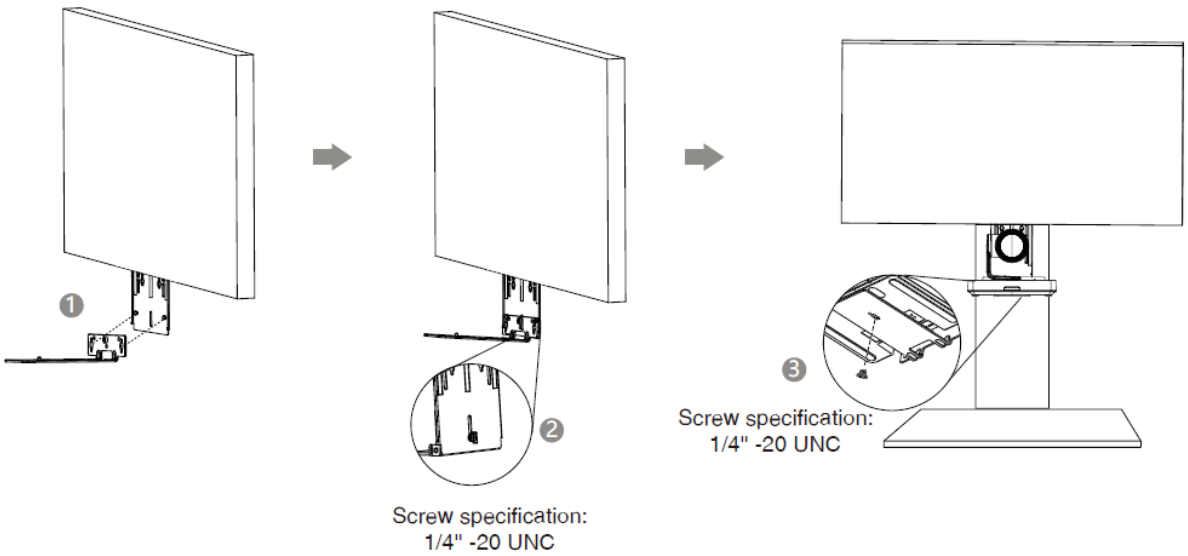

Hardware Instructions

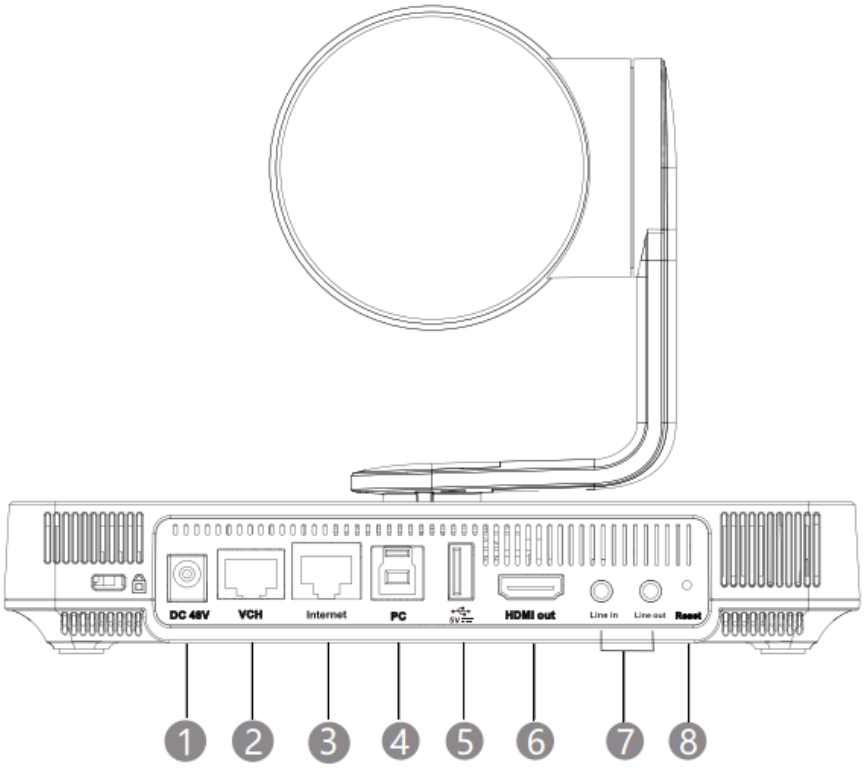

No.	Item	Description
1	DC48V	Connect to the power adapter.
2	VCH Port	Connect to an audio device (for example: CP50).
3	Internet Port	For wired network device management.
4	PC Port	Connect to a PC as video output or as device debugging purpose.
5	USB-A Port	Connect to USB disk to export the logs.
6	HDMI out	Sharing content or camera image.
7	Line in /out	The UVC85 can be connected to third-party audio input and output devices via a 3.5mm audio cable.
8	Reset	Reset to factory defaults.

Connection

Option 1: Connect to PC

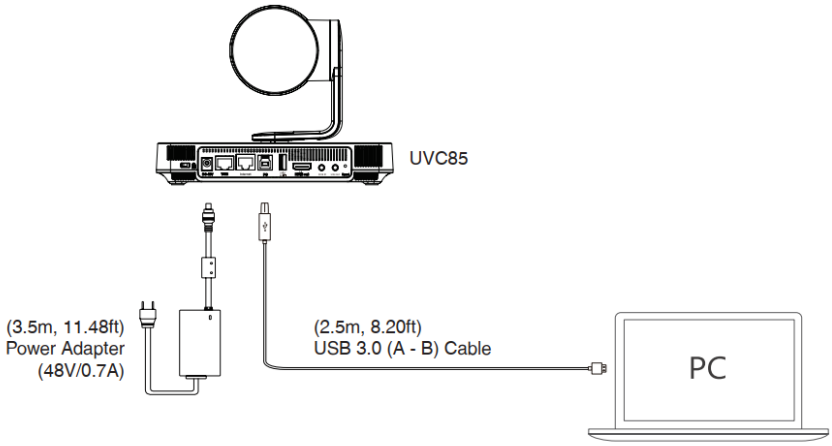

Option 2: USB-BYOD Connect PC and TV

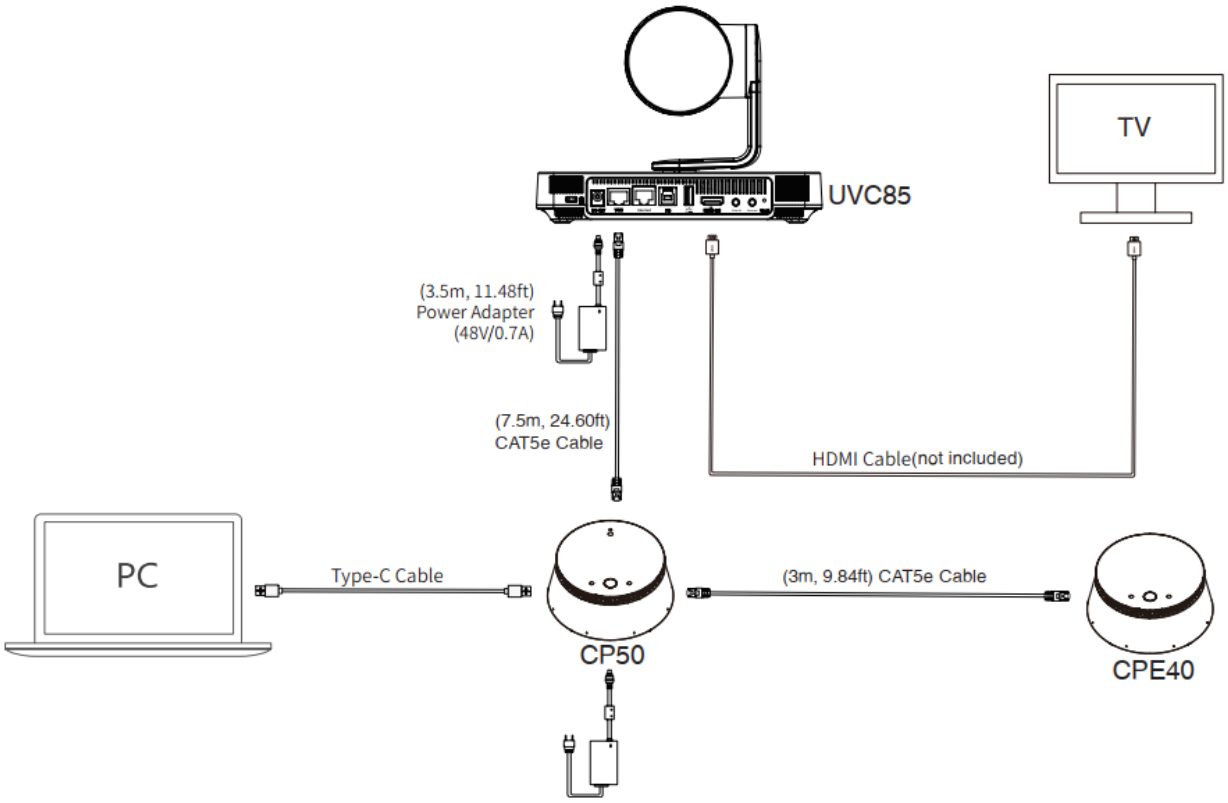

Option3: External device for the OPS

> ⓘ **NOTE**
> In this mode, additional PC connectivity to CP50 for content sharing is not supported.

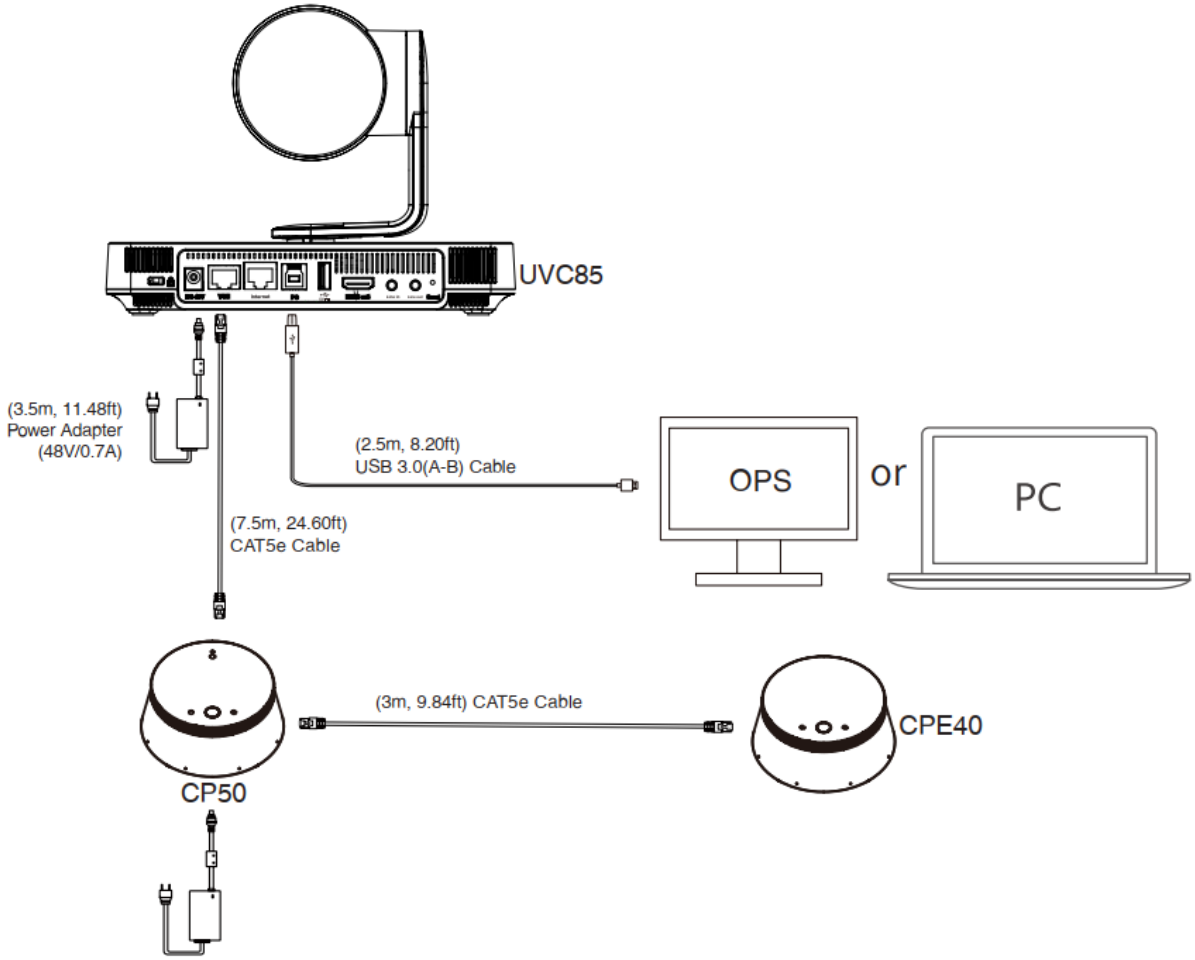

LED Indicator

LED Status	Description
Off	UVC85 is not properly connected to the PC or not in a normal working condition.
Solid green	The UVC85 is active.
Solid red	The UVC85 is in sleep mode.
Flashing orange	The UVC85 is upgrading firmware.
Flashing red	The UVC85 is in recovery mode.